HiKOKI

CORDLESS TRIMMER M18DYA

Item No.	Code No.	Description	No. Used	Remarks
1	379008	NUT	1	
2	378886	COLLET 1/8"	1	
3	379009	FLEXIBLE SUPPORT	1	
4	379011	C-RING	1	
5	379012	FIXIED BASE	1	
6	379010	ADJUSTING KNOB SET	1	
7		BRAND LABEL	1	
8	379013	FELT	4	
9	379014	RUBBER PIN	4	
10	361186	ROTOR	1	
11	341136	STATOR SET	1	
14	379016	RUBBER POLE	1	
15	379017	PUSHING BUTTON	1	
16		NAME PLATE	1	
17	379015	TAPPING SCREW ST2.9	8	
18	379018	HOUSING SET	1	
		STANDARD ACCESSORIES		
508	378892	WRENCH	1	
509	337357	TRUSS HD. SCREW M4 (BLACK)	1	
510	372229	HOOK	1	
511	378889	COLLET 1/4"	1	
512	378891	BIT 1/8"	2	

* ALTERNATIVE PARTS

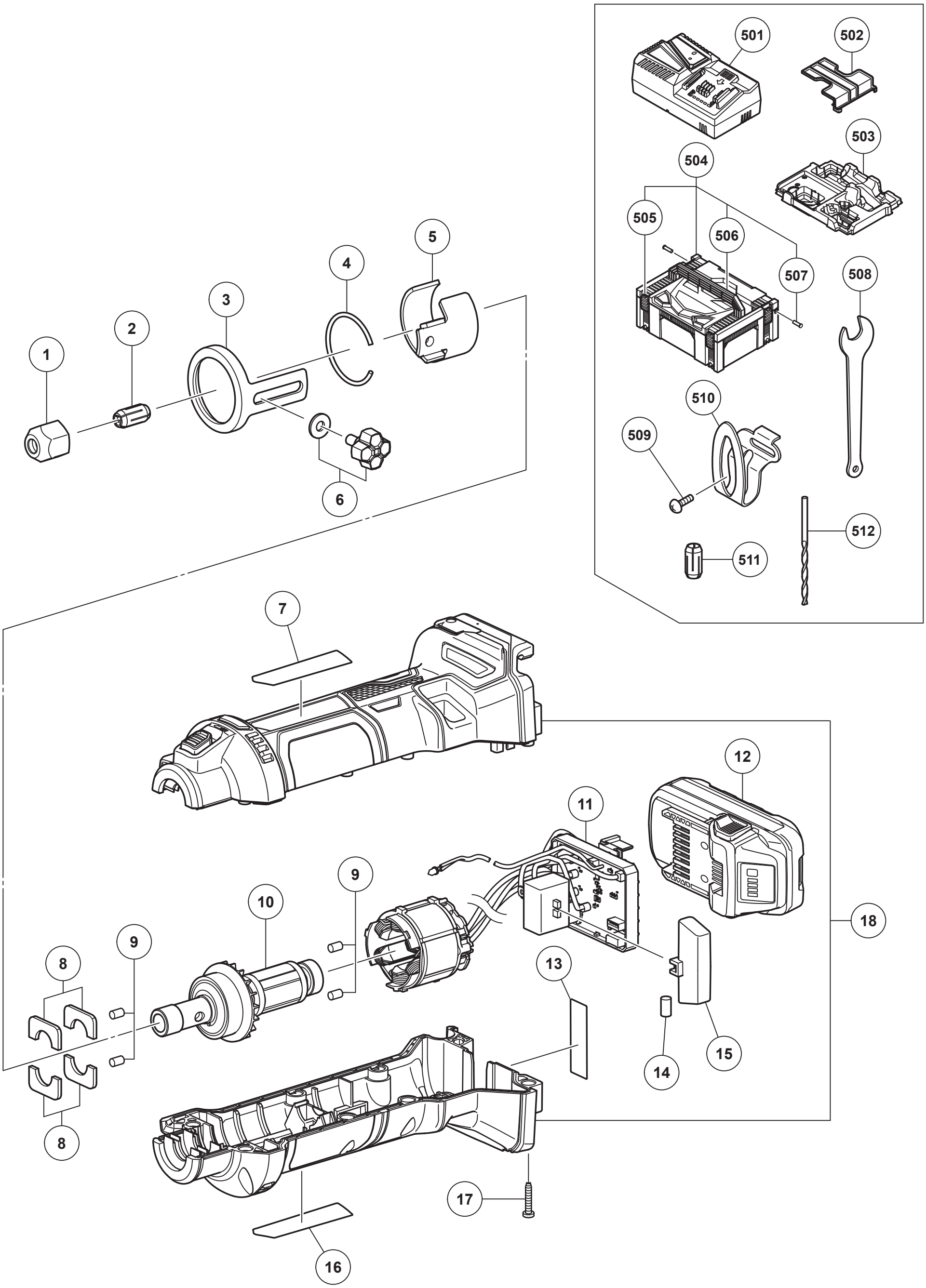

MODEL
M18DYA

Rev.1